Vision System

FZ5-Series

A range of processing items for positioning and inspection

- The High-precision Object Detection Required for Positioning
- Converting Measurement Results to Output User Units
- Easily Integrate Interfaces into the Machine
- Easy Setup with Program Scalability

System configuration

EtherNet/IP, No-protocol Ethernet and PLC Link Connections

Example of the FZ5 Sensor Controllers (4-camera type)

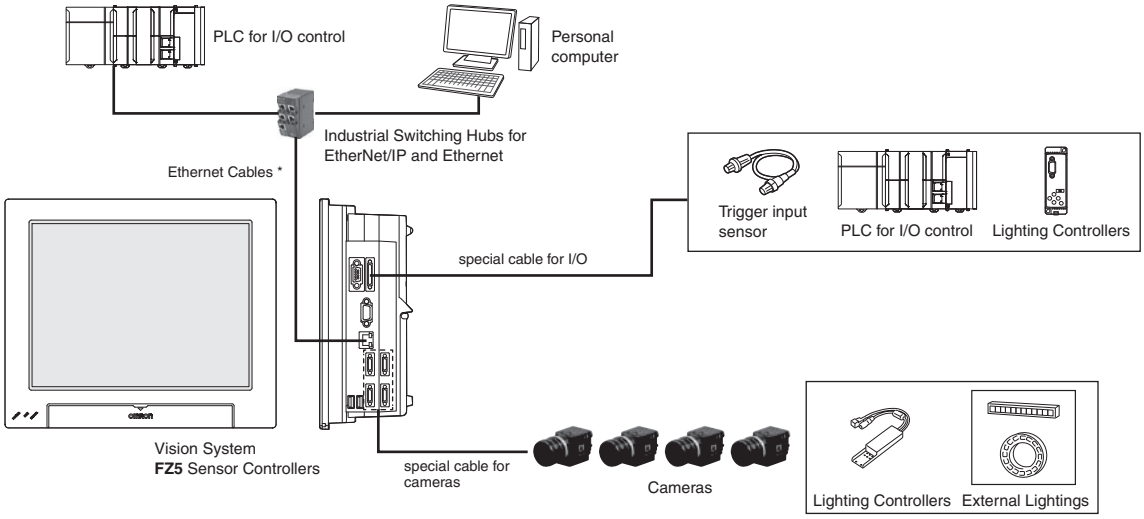

* To use Straight or cross STP (shielded twisted-pair) cable of category 5 or higher for Ethernet and RJ45 connector.

Ordering Information

FZ5 Series Sensor Controllers

Item		CPU	No. of cameras	Output	Model
	Controllers integrated with LCD	High-speed Controllers	2	NPN	**FZ5-1200**
				PNP	**FZ5-1205**
			4	NPN	**FZ5-1200-10**
				PNP	**FZ5-1205-10**
			2	NPN	**FZ5-1100 ***
				PNP	**FZ5-1105 ***
			4	NPN	**FZ5-1100-10 ***
				PNP	**FZ5-1105-10 ***
		Standard Controllers	2	NPN	**FZ5-800**
				PNP	**FZ5-805**
			4	NPN	**FZ5-800-10**
				PNP	**FZ5-805-10**
			2	NPN	**FZ5-600 ***
				PNP	**FZ5-605 ***
			4	NPN	**FZ5-600-10 ***
				PNP	**FZ5-605-10 ***
	Box-type controllers	Lite Controllers	2	NPN	**FZ5-L350**
				PNP	**FZ5-L355**
			4	NPN	**FZ5-L350-10**
				PNP	**FZ5-L355-10**

* The production of the FZ5-series Controllers FZ5-1100(-10)/-1105(-10)/-600(-10)/-605(-10) will be discontinued at the end of May 2018.

Cameras

Item		Descriptions	Color / Monochrome	Image Acquisition Time	Model
	Digital CCD/CMOS Cameras (Lens required)	5 million pixels (When connecting FZ5-6□ or FZ5-L35□, up to two cameras can be connected.)	Color	38.2 ms	**FZ-SC5M3**
			Monochrome		**FZ-S5M3**
		2 million pixels	Color	33.3 ms	**FZ-SC2M**
			Monochrome		**FZ-S2M**
		300,000 pixels	Color	12.5 ms	**FZ-SC**
			Monochrome		**FZ-S**
	High-speed CCD Cameras (Lens required)	300,000 pixels	Color	4.9 ms	**FZ-SHC**
			Monochrome		**FZ-SH**
	Small Digital CCD Cameras (Lenses for small camera required)	300,000-pixel flat type	Color	12.5 ms	**FZ-SFC**
			Monochrome		**FZ-SF**
		300,000-pixel pen type	Color	12.5 ms	**FZ-SPC**
			Monochrome		**FZ-SP**
	Intelligent Compact CMOS Cameras (Camera + Manual Focus Lens + High power Lighting)	Narrow view	Color	16.7 ms	**FZ-SQ010F**
		Standard view	Color		**FZ-SQ050F**
		Wide View (long-distance)	Color		**FZ-SQ100F**
		Wide View (short-distance)	Color		**FZ-SQ100N**

Camera Cables

Item	Descriptions	Cable length *2	Model
	Camera Cable	2m	**FZ-VS3 2M**
		3m	**FZ-VS3 3M**
		5m	**FZ-VS3 5M**
		10m	**FZ-VS3 10M**
	Bend resistant Camera Cable	2m	**FZ-VSB3 2M**
		3m	**FZ-VSB3 3M**
		5m	**FZ-VSB3 5M**
		10m	**FZ-VSB3 10M**
	Right-angle Camera Cable *1	2m	**FZ-VSL3 2M**
		3m	**FZ-VSL3 3M**
		5m	**FZ-VSL3 5M**
		10m	**FZ-VSL3 10M**
	Bend resistant Right-angle Camera Cable *1	2m	**FZ-VSLB3 2M**
		3m	**FZ-VSLB3 3M**
		5m	**FZ-VSLB3 5M**
		10m	**FZ-VSLB3 10M**
	Long-distance Camera Cable	15m	**FZ-VS4 15M**
	Long-distance Right-angle Camera Cable *1	15m	**FZ-VSL4 15M**
	Cable Extension Unit Up to two Extension Units and three Cables can be connected. (Maximum cable length: 45 m *2)	-	**FZ-VSJ**

*1 This Cable has an L-shaped connector on the Camera end.
*2 The maximum cable length depends on the Camera being connected, and the model and length of the Cable being used. For further information, please refer to the "Cameras / Cables Connection Table" and "Maximum Extension Length Using Cable Extension Units FZ-VSJ".

Cameras / Cables Connection Table

Type of camera	Model	Cable length	Digital CCD/CMOS cameras			Small digital CCD cameras Pen type / flat type	High-speed CCD cameras	Intelligent compact CMOS cameras
			300,000-pixel	2 million-pixel	5 million-pixel			
			FZ-S/SC	FZ-S2M/SC2M	FZ-S5M3/ SC5M3	FZ-SF/SFC FZ-SP/SPC	FZ-SH/SHC	FZ-SQ□
Camera Cables Right-angle camera cables	**FZ-VS3 FZ-VSL3**	**2 m**	Yes	Yes	Yes	Yes	Yes	Yes
		3 m	Yes	Yes	Yes	Yes	Yes	Yes
		5 m	Yes	Yes	Yes	Yes	Yes	Yes
		10 m	Yes	Yes	No	Yes	Yes	Yes
Bend resistant camera cables Bend resistant Right-angle Camera Cable	**FZ-VSB3 FZ-VSLB3**	**2 m**	Yes	Yes	Yes	Yes	Yes	Yes
		3 m	Yes	Yes	Yes	Yes	Yes	Yes
		5 m	Yes	Yes	Yes	Yes	Yes	Yes
		10 m	Yes	Yes	No	Yes	Yes	Yes
Long-distance camera cable Long-distance right-angle camera cable	**FZ-VS4 FZ-VSL4**	**15 m**	Yes	Yes	No	Yes	Yes	Yes

Maximum Extension Length Using Cable Extension Units FZ-VSJ

Item	Model	Maximum cable length using 1 Camera Cable	Max. number of connectable Extension Units	Using Cable Extension Units FZ-VSJ	
				Max. cable length	Connection configuration
Digital CCD/CMOS Cameras	**FZ-S/SC** **FZ-S2M/SC2M**	15 m (Using FZ-VS4/VSL4)	2	45 m	Camera cable: 15 m × 3 Extension Unit: 2
	FZ-S5M3/SC5M3	5 m (Using FZ-VS□/VSL□)	2	15 m	Camera cable: 5 m × 3 Extension Unit: 2
Small Digital CCD Cameras Flat type/ Pen type	**FZ-SF/SFC** **FZ-SP/SPC**	15 m (Using FZ-VS4/VSL4)	2	45 m	Camera cable: 15 m × 3 Extension Unit: 2
High-speed CCD Cameras	**FZ-SH/SHC**	15 m (Using FZ-VS4/VSL4)	2	45 m	Camera cable: 15 m × 3 Extension Unit: 2
Intelligent Compact CMOS Cameras	**FZ-SQ□**	15 m (Using FZ-VS4/VSL4)	2	45 m	Camera cable: 15 m × 3 Extension Unit: 2

LED Monitor Cable

Item	Descriptions	Cable length	Model
	LED Monitor Cable	2 m	**FZ-VM 2M**
		5 m	**FZ-VM 5M**

Parallel I/O Cable

Item	Descriptions	Cable length	Model
	Parallel I/O Cable	2 m	**FZ-VP 2M**
		5 m	**FZ-VP 5M**
	Parallel I/O Cable for Connector-terminal Conversion Unit Connector-Terminal Block Conversion Units can be connected (Terminal Blocks Recommended Products: OMRON XW2R-□50GD-T*)	2 m	**FZ-VPX 2M**
		5 m	**FZ-VPX 5M**
	Connector-Terminal Block Conversion Units, General-purpose devices		**XW2R-□50GD-T***

* Insert the wiring method into □ in the model number as follows. Phillips screw = J, Slotted screw (rise up) = E, Push-in spring = P
Refer to the XW2R Series catalog (Cat. No. G077) for details.

Recommended EtherNet/IP Communications Cables

Use Straight or cross STP (shielded twisted-pair) cable of category 5 or higher for EtherNet/IP.

Item	Descriptions			Model
–	Wire Gauge and Number of Pairs: AWG24, 4-pair Cable	Cables	Hitachi Metals, Ltd.	**NETSTAR-C5E SAB 0.5 × 4P** *1
–			Kuramo Electric Co.	**KETH-SB** *1
–			SWCC Showa Cable Systems Co.	**FAE-5004** *1
–		RJ45 Connectors	Panduit Corporation	**MPS588-C** *1
–	Wire Gauge and Number of Pairs: AWG22, 2-pair Cable	Cables	Kuramo Electric Co.	**KETH-PSB-OMR** *2
–			JMACS Japan Co.,Ltd.	**PNET/B** *2
		RJ45 Assembly Connector	OMRON	**XS6G-T421-1** *2

Note: Please be careful while cable processing for EtherNet/IP, connectors on only one end should be shield connected.
*1 We recommend you to use above cable For EtherNet/IP and RJ45 Connector together.
*2 We recommend you to use above cable For EtherNet/IP and RJ45 Assembly Connector together.

Accessories

Item	Descriptions				Model
	LCD Monitor 8.4 inches For Box-type Controllers				**FZ-M08**
	USB Memory		2 GB		**FZ-MEM2G**
			8 GB		**FZ-MEM8G**
	VESA Attachment For installing the LCD integrated-type controller				**FZ-VESA**
	Desktop Controller Stand For installing the LCD integrated-type controller				**FZ-DS**
	Display/USB Switcher				**FZ-DU**
–	Mouse Recommended Products Driverless wired mouse (A mouse that requires the mouse driver to be installed is not supported.)				–
	Industrial Switching Hubs for EtherNet/IP and Ethernet	3 port	Failure detection: None	Current consumption: 0.22 A	**W4S1-03B**
		5 port	Failure detection: None	Current consumption: 0.22 A	**W4S1-05B**
		5 port	Failure detection: Supported		**W4S1-05C**
–	External Lighting		–		**FLV Series ***
					FL Series *
	Lighting Controller (Required to control external lighting from a Controller)	For FLV-Series	Camera Mount Lighting Controller		**FLV-TCC Series ***
			Analog Lighting Controller		**FLV-ATC Series ***
		For FL-Series	Camera Mount Lighting Controller		**FL-TCC Series ***
	For Intelligent Compact Camera		Mounting Bracket		**FQ-XL**
			Mounting Brackets		**FQ-XL2**
			Polarizing Filter Attachment		**FQ-XF1**
–	Mounting Bracket for FZ-S□				**FZ-S-XLC**
	Mounting Bracket for FZ-S□2M				**FZ-S2M-XLC**
	Mounting Bracket for FZ-SH□				**FZ-SH-XLC**
	Mounting Bracket for FH-S□, FZ-S□5M□				**FH-SM-XLC**

* Refer to the Vision Accessory Catalog (Cat. No. Q198) for details.

Lenses

C-mount Lens for 1/3-inch image sensor (Recommend: FZ-S□/FZ-SH□)

Model	3Z4S-LE SV-03514V	3Z4S-LE SV-04514V	3Z4S-LE SV-0614V	3Z4S-LE SV-0813V	3Z4S-LE SV-1214V	3Z4S-LE SV-1614V	3Z4S-LE SV-2514V	3Z4S-LE SV-3518V	3Z4S-LE SV-5018V	3Z4S-LE SV-7527V	3Z4S-LE SV-10035V
Appearance/ Dimensions (mm)	 29.5 dia. 30.4	 29.5 dia. 29.5	 29 dia. 30.0	 28 dia. 34.0	 29 dia. 29.5	 29 dia. 24.0	 29 dia. 24.5	 29 dia. 33.5[WD:∞] to 37.5[WD:300]	 32 dia. 37.0[WD:∞] to 39.4[WD:1000]	 32 dia. 42.0[WD:∞] to 44.4[WD:1000]	 32 dia. 43.9[WD:∞] to 46.3[WD:1000]
Focal length	3.5 mm	4.5 mm	6 mm	8 mm	12 mm	16 mm	25 mm	35 mm	50 mm	75 mm	100 mm
Aperture (F No.)	1.4 to Close	1.4 to Close	1.4 to Close	1.3 to Close	1.4 to Close	1.4 to Close	1.4 to Close	1.8 to Close	1.8 to Close	2.7 to Close	3.5 to Close
Filter size	–	–	M27.0 P0.5	M25.5 P0.5	M27.0 P0.5	M27.0 P0.5	M27.0 P0.5	M27.0 P0.5	M30.5 P0.5	M30.5 P0.5	M30.5 P0.5
Maximum sensor size	1/3 inch	1/3 inch	1/3 inch	1/3 inch	1/3 inch	1/3 inch	1/3 inch	1/3 inch	1/3 inch	1/3 inch	1/3 inch
Mount	C mount										

C-mount Lens for 2/3-inch image sensor (Recommend: FZ-S□2M/FZ-S□5M3)

Model	3Z4S-LE SV-0614H	3Z4S-LE SV-0814H	3Z4S-LE SV-1214H	3Z4S-LE SV-1614H	3Z4S-LE SV-2514H	3Z4S-LE SV-3514H	3Z4S-LE SV-5014H	3Z4S-LE SV-7525H	3Z4S-LE SV-10028H
Appearance/ Dimensions (mm)	42 dia. 57.5	39 dia. 52.5	30 dia. 51.0	30 dia. 47.5	30 dia. 36.0	44 dia. 45.5	44 dia. 57.5	36 dia. 49.5[WD:∞] to 54.6[WD:1200]	39 dia. 66.5[WD:∞] to 71.6[WD:2000]
Focal length	6 mm	8 mm	12 mm	16 mm	25 mm	35 mm	50 mm	75 mm	100 mm
Aperture (F No.)	1.4 to 16	1.4 to 16	1.4 to 16	1.4 to 16	1.4 to 16	1.4 to 16	1.4 to 16	2.5 to Close	2.8 to Close
Filter size	M40.5 P0.5	M35.5 P0.5	M27.0 P0.5	M27.0 P0.5	M27.0 P0.5	M35.5 P0.5	M40.5 P0.5	M34.0 P0.5	M37.5 P0.5
Maximum sensor size	2/3 inch	2/3 inch	2/3 inch	2/3 inch	2/3 inch	2/3 inch	2/3 inch	1 inch	1 inch
Mount	C mount								

Lenses for small camera

Model	FZ-LES3	FZ-LES6	FZ-LES16	FZ-LES30
Appearance/ Dimensions (mm)	12 dia. 16.4	12 dia. 19.7	12 dia. 23.1	12 dia. 25.5
Focal length	3 mm	6 mm	16 mm	30 mm
Aperture (F No.)	2.0 to 16	2.0 to 16	3.4 to 16	3.4 to 16

Vibrations and Shocks Resistant C-mount Lens for 2/3-inch image sensor (Recommend: FZ-S□/FZ-S□2M/FZ-S□5M2/FZ-SH□)

Model	3Z4S-LE VS-MC15-□□□□□ *1									3Z4S-LE VS-MC20-□□□□□ *1								
Appearance/ Dimensions (mm)	31 dia. 25.4[0.03×] to 29.5[0.3×]									31 dia. 23.0[0.04×] to 30.5[0.4×]								
Focal length	15 mm									20 mm								
Filter size	M27.0 P0.5									M27.0 P0.5								
Optical magnification	0.03 ×			0.2 ×			0.3 ×			0.04 ×			0.25 ×			0.4 ×		
Aperture (fixed F No.) *2	2	5.6	8	2	5.6	8	2	5.6	8	2	5.6	8	2	5.6	8	2	5.6	8
Depth of field (mm) *3	183.1	512.7	732.4	4.8	13.4	19.2	2.3	6.5	9.2	110.8	291.2	416.0	3.4	9.0	12.8	1.5	3.9	5.6
Maximum sensor size	2/3 inch																	
Mount	C Mount																	

Model	3Z4S-LE VS-MC25N-□□□□□ *1									3Z4S-LE VS-MC30□□□□□ *1								
Appearance/ Dimensions (mm)	31 dia. 26.5[0.05×] to 38.0[0.5×]									31 dia. 24.0[0.06×] to 35.7[0.45×]								
Focal length	25 mm									30 mm								
Filter size	M27.0 P0.5									M27.0 P0.5								
Optical magnification	0.05 ×			0.25 ×			0.5 ×			0.06 ×			0.15 ×			0.45 ×		
Aperture (fixed F No.) *2	2	5.6	8	2	5.6	8	2	5.6	8	2	5.6	8	2	5.6	8	2	5.6	8
Depth of field (mm) *3	67.2	188.2	268.8	3.2	9.0	12.8	1.0	2.7	3.8	47.1	131.9	188.4	8.2	22.9	32.7	1.1	3.2	4.6
Maximum sensor size	2/3 inch																	
Mount	C Mount																	

Model	3Z4S-LE VS-MC35-□□□□□ *1									3Z4S-LE VS-MC50-□□□□□ *1								
Appearance/ Dimensions (mm)	31 dia. 32.0[0.26×] to 45.7[0.65×]									31 dia. 44.5[0.08×] to 63.9[0.48×]								
Focal length	35 mm									50 mm								
Filter size	M27.0 P0.5									M27.0 P0.5								
Optical magnification	0.26 ×			0.3 ×			0.65 ×			0.08 ×			0.2 ×			0.48 ×		
Aperture (fixed F No.) *2	1.9	5.6	8	1.9	5.6	8	1.9	5.6	8	2	5.6	8	2	5.6	8	2	5.6	8
Depth of field (mm) *3	2.8	8.4	11.9	2.2	6.5	9.2	0.6	1.7	2.5	33.8	75.6	108.0	6.0	13.4	19.2	1.3	2.9	4.1
Maximum sensor size	2/3 inch																	
Mount	C Mount																	

Model	3Z4S-LE VS-MC75-□□□□□ *1								
Appearance/ Dimensions (mm)	31 dia. 70.0[0.14×] to 105.5[0.62×]								
Focal length	75 mm								
Filter size	M27.0 P0.5								
Optical magnification	0.14 ×			0.2 ×			0.62 ×		
Aperture (fixed F No.) *2	3.8	5.6	8	3.8	5.6	8	3.8	5.6	8
Depth of field (mm) *3	17.7	26.1	37.2	9.1	13.4	19.2	1.3	1.9	2.7
Maximum sensor size	2/3 inch								
Mount	C Mount								

*1 Insert the iris range into □□□□□ in the model number as follows.
F=1.9 to 3.8: blank
F=5.6: FN056
F=8: FN080
*2 F-number can be selected from maximum aperture, 5.6, and 8.0.
*3 When circle of least confusion is 40 μm.

Extension Tubes

Lenses	For C mount Lenses *	For Small Digital CCD Cameras
Model	**3Z4S-LE SV-EXR**	**FZ-LESR**
Contents	Set of 7 tubes (40 mm, 20 mm,10 mm, 5 mm, 2.0 mm, 1.0 mm, and 0.5 mm) Maximum outer diameter: 30 mm dia.	Set of 3 tubes (15 mm,10 mm, 5 mm) Maximum outer diameter: 12 mm dia.

* Do not use the 0.5-mm, 1.0-mm, and 2.0-mm Extension Tubes attached to each other. Since these Extension Tubes are placed over the threaded section of the Lens or other Extension Tube, the connection may loosen when more than one 0.5-mm, 1.0-mm or 2.0-mm Extension Tube are used together.
Reinforcement is required to protect against vibration when Extension Tubes exceeding 30 mm are used.
When using the Extension Tube, check it on the actual device before using it.

Ratings and Specifications (FZ5 Sensor Controllers)

Type			High-speed Controllers				Standard Controllers				Lite Controllers	
Model		NPN	FZ5-1200	FZ5-1200-10	FZ5-1100	FZ5-1100-10	FZ5-800	FZ5-800-10	FZ5-600	FZ5-600-10	FZ5-L350	FZ5-L350-10
		PNP	FZ5-1205	FZ5-1205-10	FZ5-1105	FZ5-1105-10	FZ5-805	FZ5-805-10	FZ5-605	FZ5-605-10	FZ5-L355	FZ5-L355-10
Controller type			Controllers integrated with LCD								Box-type controllers	
No. of Cameras			2	4	2	4	2	4	2	4	2	4
Connected Camera			Can be connected to FZ-S series. (Can not be connected to FH-S series.)						Can be connected to FZ-S series. (Can not be connected to FH-S series. When connecting 5 million-pixel cameras, up to two cameras can be connected.)			
Processing resolution	When connected to a intelligent compact camera		752 (H) × 480 (V)									
	When connected to a 300,000-pixel camera		640 (H) × 480 (V)									
	When connected to a 2 million-pixel camera		1600 (H) × 1200 (V)									
	When connected to a 5 million-pixel camera		2448 (H) × 2044 (V)									
No. of scenes			128 *1						128			
Number of logged images *2	When connected to a intelligent compact camera	Connected to 1 camera	232						214			
		Connected to 2 cameras	116						107			
		Connected to 3 cameras	77						71			
		Connected to 4 cameras	58						53			
	When connected to a 300,000-pixel camera	Connected to 1 camera	Color camera: 270, Monochrome Camera: 272						Color camera: 250, Monochrome Camera: 252			
		Connected to 2 cameras	Color camera: 135, Monochrome Camera: 136						Color camera: 125, Monochrome Camera: 126			
		Connected to 3 cameras	Color camera: 90, Monochrome Camera: 90						Color camera: 83, Monochrome Camera: 84			
		Connected to 4 cameras	Color camera: 67, Monochrome Camera: 68						Color camera: 62, Monochrome Camera: 63			
	When connected to a 2 million-pixel camera	Connected to 1 camera	Color camera: 43, Monochrome Camera: 43						Color camera: 40, Monochrome Camera: 40			
		Connected to 2 cameras	Color camera: 21, Monochrome Camera: 21						Color camera: 20, Monochrome Camera: 20			
		Connected to 3 cameras	Color camera: 14, Monochrome Camera: 14						Color camera: 13, Monochrome Camera: 13			
		Connected to 4 cameras	Color camera: 10, Monochrome Camera: 10						Color camera: 10, Monochrome Camera: 10			
	When connected to a 5 million-pixel camera	Connected to 1 camera	Color camera: 16, Monochrome Camera: 16						Color camera: 11, Monochrome Camera: 11			
		Connected to 2 cameras	Color camera: 8, Monochrome Camera: 8						Color camera: 5, Monochrome Camera: 5			
		Connected to 3 cameras	Color camera: 5, Monochrome Camera: 5						–			
		Connected to 4 cameras	Color camera: 4, Monochrome Camera: 4						–			
Operation			Touch pen, mouse, etc.								Mouse or similar device	
Settings			Create series of processing steps by editing the flowchart (Help messages provided).									
Language			Japanese, English, Chinese (simplified), Chinese (Traditional), Korean, German, French, Italian, Spanish						Japanese, English, Chinese (simplified), Chinese (Traditional)			
Serial communications			RS-232C/422: 1 CH								RS-232: 1CH	
EtherNet communications			Ethernet 1000BASE-T		Ethernet 100BASE-TX/ 10BASE-T		Ethernet 1000BASE-T		Ethernet 100BASE-TX/ 10BASE-T		Ethernet 1000BASE-T	
EtherNet/IP communications			Ethernet port baud rate: 100 Mbps (100Base-TX)									
Parallel I/O			(When used in Multi-line random-trigger mode) • 17 inputs (RESET, STEP0/ENCTRIG_Z0, STEP1/ENCTRIG_Z1, DSA0 to 1, ENCTRIG_A0 to 1, ENCTRIG_B0 to 1, DI0 to 7), • 29 outputs (RUN/BUSY1, BUSY0, GATE0 to 1, OR0 to 1, READY0 to 1, ERROR, STGOUT0 to 3, DO0 to 15) (When used in other mode) • 13 inputs (RESET, STEP0/ENCTRIG_Z0, DSA0, ENCTRIG_A0, ENCTRIG_B0, DI0 to 7), • 26 outputs (RUN, BUSY0, GATE0, OR0, READY0, ERROR, STGOUT0 to 3, DO0 to 15) * STGOUT 2 to 3 only for camera 4 ch type						• 13 inputs (RESET, STEP0/ENCTRIG_Z0, DSA0, ENCTRIG_A0, ENCTRIG_B0, DI0 to 7), • 26 outputs (RUN, BUSY0, GATE0, OR0, READY0, ERROR, STGOUT0 to 3, DO0 to 15) * STGOUT 2 to 3 only for camera 4 ch type		• 11 inputs (RESET, STEP, DSA, and DI 0 to 7), • 26 outputs (RUN, BUSY, GATE, OR, READY, ERROR, STGOUT 0 to 3, and DO 0 to 15) * STGOUT 2 to 3 only for camera 4 ch type	
Monitor interface			Integrated Controller and LCD 12.1 inch TFT color LCD (Resolution: XGA 1,024 × 768 dots)								Analog RGB video output, 1 channel (Resolution: XGA 1,024 × 768 dots)	
USB interface			4 channels (supports USB 1.1 and 2.0)								2CH (supports USB1.1/2.0)	
Power supply voltage *3			20.4 to 26.4 VDC									
Current consumption (at 24.0 VDC) *4	When connected to a intelligent compact camera		5.0 A max.	7.5 A max.	5.0 A max.	7.5 A max.	5.0 A max.	7.5 A max.	5.0 A max.	7.5 A max.	4.0 A max.	5.5 A max.
	When connected to a 300,000-pixel camera		3.7 A max.	4.9 A max.	3.7 A max.	4.9 A max.	3.7 A max.	4.9 A max.	3.7 A max.	4.9 A max.	2.6 A max.	2.9 A max.
	When connected to a 2 million-pixel camera											
	When connected to a 5 million-pixel camera											
Ambient temperature range			Operating: 0 to 45 °C for low cooling fan speeds, 0 to 50 °C for high cooling fan speeds Storage: -20 to 65 °C (with no icing or condensation)								Operating: 0 to 45 °C, 0 to 50 °C Storage: -20 to 65 °C (with no icing or condensation)	
Ambient humidity range			Operating and storage: 35% to 85% (with no condensation)									
Weight			Approx. 3.2 kg	Approx. 3.4 kg	Approx. 3.2 kg	Approx. 3.4 kg	Approx. 3.2 kg	Approx. 3.4 kg	Approx. 3.2 kg	Approx. 3.4 kg	Approx. 1.8 kg	
Accessories			Touch pen (one, inside the front panel), Instruction Manual, 6 mounting brackets								Instruction Manual	

*1 This can be increased up to 1024 using the Scene group conversion tool.
*2 The image logging capacity changes when multiple cameras of different types are connected at the same time.
*3 Do not ground the positive terminal of the 24-VDC power supply to a Lite Controller.
If the positive terminal is grounded, electrical shock may occur when an SG (0-V) part, such as the case of the Controller or Camera, is touched.
*4 The current consumption when the maximum number of cameras supported by each controller are connected.
If a lighting controller model is connected to a lamp, the current consumption is as high as when an intelligent compact camera is connected.

Ratings and Specifications (Cameras)

Digital CCD/CMOS Cameras

Model	FZ-S	FZ-SC	FZ-S2M	FZ-SC2M	FZ-S5M3	FZ-SC5M3
Image elements	Interline transfer reading all pixels, CCD image elements (1/3-inch equivalent)		Interline transfer reading all pixels, CCD image elements (1/1.8-inch equivalent)		CMOS image elements (2/3-inch equivalent)	
Color/Monochrome	Monochrome	Color	Monochrome	Color	Monochrome	Color
Effective pixels	640 (H) × 480 (V)		1600 (H) × 1200 (V)		2448 (H) × 2048 (V)	
Imaging area H x V (opposing corner)	4.8 × 3.6 (6.0mm)		7.1 × 5.4 (8.9mm)		8.4 × 7.1 (11mm)	
Pixel size	7.4 (μm) × 7.4 (μm)		4.4 (μm) × 4.4 (μm)		3.45 (μm) × 3.45 (μm)	
Shutter function	Electronic shutter; select shutter speeds from 20 μs to 100 ms					
Partial function	12 to 480 lines		12 to 1200 lines		4 to 2048 lines	
Frame rate (Image Acquisition Time)	80 fps (12.5 ms)		30 fps (33.3 ms)		25.6 fps (38.2 ms)	
Lens mounting	C mount					
Field of vision, installation distance	Selecting a lens according to the field of vision and installation distance					
Ambient temperature range	Operating: 0 to 50 °C Storage: -25 to 65 °C (with no icing or condensation)		Operating: 0 to 40 °C Storage: -25 to 65 °C (with no icing or condensation)			
Ambient humidity range	Operating and storage: 35% to 85% (with no condensation)					
Weight	Approx. 55 g		Approx. 76 g		Approx. 85 g	
Accessories	Instruction manual					

Small CCD Digital Cameras

Model	FZ-SF	FZ-SFC	FZ-SP	FZ-SPC
Image elements	Interline transfer reading all pixels, CCD image elements (1/3-inch equivalent)			
Color/Monochrome	Monochrome	Color	Monochrome	Color
Effective pixels	640 (H) × 480 (V)			
Imaging area H x V (opposing corner)	4.8 × 3.6 (6.0mm)			
Pixel size	7.4 (μm) × 7.4 (μm)			
Shutter function	Electronic shutter; select shutter speeds from 20 μm to 100 ms			
Partial function	12 to 480 lines			
Frame rate (Image Acquisition Time)	80 fps (12.5ms)			
Lens mounting	Special mount (M10.5 P0.5)			
Field of vision, installation distance	Selecting a lens according to the field of vision and installation distance			
Ambient temperature range	Operating: 0 to 50 °C (camera amp) 0 to 45 °C (camera head) Storage: -25 to 65 °C (with no icing or condensation)			
Ambient humidity range	Operating and storage: 35% to 85% (with no condensation)			
Weight	Approx. 150 g			
Accessories	Instruction manual, installation bracket, Four mounting brackets (M2)		Instruction manual	

High-speed CCD Cameras

Model	FZ-SH	FZ-SHC
Image elements	Interline transfer reading all pixels, CCD image elements (1/3-inch equivalent)	
Color/Monochrome	Monochrome	Color
Effective pixels	640 (H) × 480 (V)	
Imaging area H x V (opposing corner)	4.8 × 3.6 (6.0mm)	
Pixel size	7.4 (μm) × 7.4 (μm)	
Shutter function	Electronic shutter; select shutter speeds from 1/10 to 1/50,000 s	
Partial function	12 to 480 lines	
Frame rate (Image Acquisition Time)	204 fps (4.9ms)	
Field of vision, installation distance	Selecting a lens according to the field of vision and installation distance	
Ambient temperature range	Operating: 0 to 40 °C Storage: -25 to 65 °C (with no icing or condensation)	
Ambient humidity range	Operating and storage: 35% to 85% (with no condensation)	
Weight	Approx. 105 g	
Accessories	Instruction manual	

Intelligent Compact CMOS Cameras

Model	FZ-SQ010F	FZ-SQ050F	FZ-SQ100F	FZ-SQ100N
Image elements	CMOS color image elements (1/3-inch equivalent)			
Color/Monochrome	Color			
Effective pixels	752 (H) × 480 (V)			
Imaging area H x V (opposing corner)	4.51 × 2.88 (5.35mm)			
Pixel size	6.0 (μm) × 6.0 (μm)			
Shutter function	1/250 to 1/32,258			
Partial function	8 to 480 lines			
Frame rate (Image Acquisition Time)	60 fps (16.7 ms)			
Field of vision	7.5 × 4.7 to 13 × 8.2 mm	13 × 8.2 to 53 × 33 mm	53 × 33 to 240 × 153 mm	29 × 18 to 300 × 191 mm
Installation distance	38 to 60 mm	56 to 215 mm	220 to 970 mm	32 to 380 mm
LED class *	Risk Group2			
Ambient temperature range	Operating: 0 to 50 °C Storage: -25 to 65 °C			
Ambient humidity range	Operating and storage: 35% to 85% (with no condensation)			
Weight	Approx. 150 g		Approx. 140 g	
Accessories	Mounting bracket (FQ-XL), polarizing filter attachment (FQ-XF1), instruction manual and warning label			

* Applicable standards: IEC62471-2

• Narrow View
FZ-SQ010F

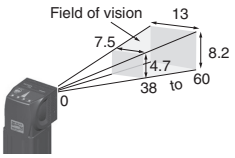

• Standard
FZ-SQ050F

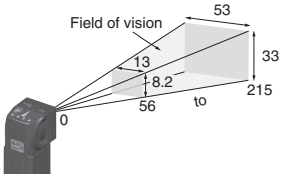

• Wide View (Long-distance)
FZ-SQ100F

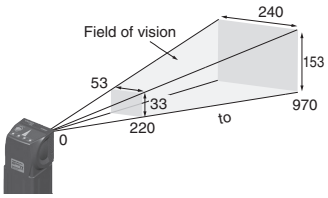

• Wide View (Short-distance)
FZ-SQ100N

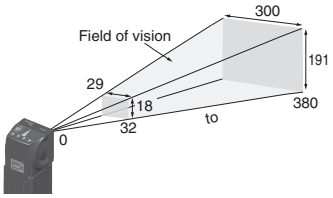

Ratings and Specifications (Cable, LCD Monitor)

Camera Cables

Model	FZ-VS3 (2 m)	FZ-VSB3 (2 m)	FZ-VSL3 (2 m)	FZ-VSLB3 (2 m)
Type	Standard	Bend resistant	Right-angle	Bend resistant Right-angle
Shock resistiveness (durability)	10 to 150 Hz single amplitude 0.15 mm 3 directions, 8 strokes, 4 times			
Ambient temperature range	Operation and storage: 0 to 65 °C (with no icing or condensation)			
Ambient humidity range	Operation and storage: 40 to 70%RH (with no condensation)			
Ambient atmosphere	No corrosive gases			
Material	Cable sheath, connector: PVC			
Minimum bending radius	69mm	69mm	69mm	69mm
Weight	Approx. 170 g	Approx. 180 g	Approx. 170 g	Approx. 180 g

Long-distance Camera Cables

Model	FZ-VS4 (15 m)	FZ-VSL4 (15 m)
Type	Standard	Right-angle
Shock resistiveness (durability)	10 to 150 Hz single amplitude 0.15 mm 3 directions, 8 strokes, 4 times	
Ambient temperature range	Operation and storage: 0 to 65 °C (with no icing or condensation)	
Ambient humidity range	Operation and storage: 40 to 70%RH (with no condensation)	
Ambient atmosphere	No corrosive gases	
Material	Cable sheath, connector: PVC	
Minimum bending radius	78 mm	
Weight	Approx. 1400 g	

Cable Extension Unit

Model	FZ-VSJ
Power supply voltage *1	11.5 to 13.5 VDC
Current consumption *2	1.5 A max.
Ambient temperature range	Operating: 0 to 50 °C; Storage: -25 to 65 °C (with no icing or condensation)
Ambient humidity range	Operating and storage: 35 to 85% (with no condensation)
Weight	Approx. 240 g
Accessories	Instruction Sheet and 4 mounting screws

*1 A 12-VDC power supply must be provided to the Cable Extension Unit when connecting the Intelligent Compact Camera, or the Lighting Controller.
*2 The current consumption shows when connecting the Cable Extension Unit to an external power supply.

Parallel Cable

Model	FZ-VP	FZ-VPX
Vibration resistiveness	10 to 150 Hz single amplitude 0.15 mm 3 directions, 8 strokes, 4 times	
Ambient temperature range	Operation: 0 to 50 °C; Storage: -20 to 65 °C (with no icing or condensation)	
Ambient humidity range	Operation and storage: 35 to 85%RH (with no condensation)	
Ambient atmosphere	No corrosive gases	
Material	Cable sheath: heat-resistant PVC Connector: resin	
Minimum bending radius	75 mm	
Weight	Approx. 160 g	Approx. 180 g

LCD Monitor

Model	FZ-M08
Size	8.4 inches
Type	Liquid crystal color TFT
Resolution	1,024 × 768 dots
Input signal	Analog RGB video input, 1 channel
Power supply voltage	21.6 to 26.4 VDC
Current consumption	Approx. 0.7 A max.
Ambient temperature range	Operating: 0 to 50 °C; Storage: -25 to 65 °C (with no icing or condensation)
Ambient humidity range	Operating and storage: 35 to 85% (with no condensation)
Weight	Approx. 1.2 kg
Accessories	Instruction Sheet and 4 mounting brackets

LED Monitor Cable

Model	FZ-VM
Vibration resistiveness	10 to 150 Hz single amplitude 0.15 mm 3 directions, 8 strokes, 4 times
Ambient temperature range	Operation: 0 to 50 °C; Storage: -20 to 65 °C (with no icing or condensation)
Ambient humidity range	Operation and storage: 35 to 85%RH (with no condensation)
Ambient atmosphere	No corrosive gases
Material	Cable sheath: heat-resistant PVC Connector: PVC
Minimum bending radius	75 mm
Weight	Approx. 170 g

Components and Functions

Example of the FZ5 Sensor Controllers LCD-integrated type (4-camera type)

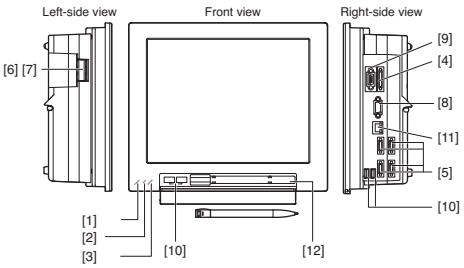

Example of the FZ5-Lite Sensor Controllers LCD-integrated type (4-camera type)

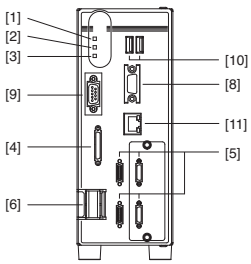

	Name	Description
[1]	POWER LED	Lit while power is ON.
[2]	RUN LED	Lit while the controller is in Run Mode.
[3]	ERROR LED	Lit when an error has occurred.
[4]	I/O connector (control lines, data lines)	Connect the controller to external devices such as a sync sensor and PLC.
[5]	Camera connector	Connect cameras.
[6]	Power	Connect a DC power supply. Wire the power supply unit independently of other devices. After wiring, replace the terminal cover.
[7]	Ground terminal	Connect the ground wire. Make sure that the controller is grounded with a separate ground wire.
[8]	Monitor connector (analog RGB)	FZ5-1100 Series/FZ5-600 Series: Cannot connect the monitor. For use this connector, contact OMRON representative. FZ5-1200 Series/FZ5-800 Series/FZ5-L350 Series: Connect monitor.
[9]	RS-232C/RS-422 connector	Connect an external device such as a personal computer or PLC.
[10]	USB connector	Connect a track ball, mouse and USB memory. A total of four USB ports are provided and any of them can be used. However, when connecting two or more USB memories, do not connect them to adjacent ports. Doing so may cause the USB memories to come into contact, resulting in malfunction or damage.
[11]	EtherNet connector	Connect the controller to a personal computer.
[12]	Touch pen (holder)	A touch pen is stored. (Provided with the LCD integrated type only)

FZ5-Series

Processing Items

Group	Icon	Processing Item	
Measurement		Search	Used to identify the shapes and calculate the position of measurement objects.
		Flexible Search	Recognizing the shapes of workpieces with variation and detecting their positions.
		Sensitive Search	Search a small difference by dividing the search model in detail, and calculating the correlation.
		ECM Search	Used to search the similar part of model form input image. Detect the evaluation value and position.
		EC Circle Search	Extract circles using "round " shape information and get position, radius and quantity in high preciseness.
		Shape Search Ⅱ	Used to search the similar part of model from input image regardless of environmental changes. Detect the evaluation value and position.
		Shape Search Ⅲ	Robust detection of positions is possible at high-speed and with high precision incorporating environmental fluctuations, such as differences in individual shapes of the workpieces, pose fluctuations, noise superimposition and shielding.
		EC Corner	This processing item measures a corner position (corner) of a workpiece.
		Ec Cross	The center position of a crosshair shape is measured using the lines created by the edge information on each side of the crosshair.
		Classification	Used when various kinds of products on the assembly line need to be sorted and identified.
		Edge Position	Measure position of measurement objects according to the color change in measurement area.
		Edge Pitch	Detect edges by color change in measurement area. Used for calculating number of pins of IC and connectors.
		Scan Edge Position	Measure peak/bottom edge position of workpieces according to the color change in separated measurement area.
		Scan Edge Width	Measure max/min/average width of workpieces according to the color change in separated measurement area.
		Circular Scan Edge Position	Measure center axis, diameter and radius of circular workpieces.
		Circular Scan Edge Width	Measure center axis, width and thickness of ring workpieces.
		Intersection	Calculate approximate lines from the edge information on two sides of a square workpiece to measure the angle formed at the intersection of the two lines.
		Color Data	Used for detecting presence and mixed varieties of products by using color average and deviation.
		Gravity and Area	Used to measure area, center of gravity of workpices by extracting the color to be measured.
		Labeling	Used to measure number, area and gravity of workpieces by extracting registered color.
		Label Data	Selecting one region of extracted Labeling, and get that measurement. Area and Gravity position can be got and judged.
		Defect	Used for appearance measurement of plain-color measurement objects such as defects, stains and burrs.
		Precise Defect	Check the defect on the object. Parameters for extraction defect can be set precisely.
		Fine Matching	Difference can be detected by overlapping and comparing (matching) registered fine images with input images.
		Character Inspect	Recognize character according correlation search with model image registered in [Model Dictionary].
		Date Verification	Reading character string is verified with internal date.
		Model Dictionary	Register character pattern as dictionary. The pattern is used in [Character Inspection].
		2DCode *2	Recognize 2D code and display where the code quality is poor.
		Barcode *1	Recognize barcode, verify and output decoded characters.
		OCR	Recognize and read characters in images as character information.
		OCR User Dictionary	Register dictionary data to use for OCR.
		Circle Angle	Used for calculating angle of inclination of circular measurement objects.
		Glue Bead Inspection	You can inspect coating of a specified color for gaps or runoffs along the coating path.
Input Image		Camera Image Input	To input images from cameras. And set up the conditions to input images from cameras. (To FZ5 Sensor Controllers only)
		Camera Image Input FH	To input images from cameras. And set up the conditions to input images from cameras. (For FH Sensor Controllers only)

Group	Icon	Processing Item	
Input Image		Camera Image Input HDR	Create high-dynamic range images by acquiring several images with different conditions.
		Camera Image Input HDRLite	HDR function for FZ-SQ□ Intelligent Compact Cameras.
		Camera Switch	To switch the cameras used for measurement. Not input images from cameras again.
		Measurement Image Switching	To switch the images used for measurement. Not input images from camera again.
		Multi-trigger Imaging	The Multi-trigger Imaging processing item captures multiple images at user-defined timings and executes parallel measurement for each image. Insert the Multi-trigger Imaging to the top of the flow.
		Multi-trigger Imaging Task	The Multi-trigger Imaging processing item captures multiple images at user-defined timings and executes parallel measurement for each image. Insert this processing item to the top of the processing which requires imaging for multiple times.
Compensate image		Position Compensation	Used when positions are differed. Correct measurement is performed by correcting position of input images.
		Filtering	Used for processing images input from cameras in order to make them easier to be measured.
		Backgrond Suppression	To enhance contrast of images by extracting color in specified brightness.
		Brightness Correct Filter	Track brightness change of entire screen and remove gradual brightness change such as uneven brightness.
		Color Gray Filter	Color image is converted into monochrome images to emphasize specific color.
		Extract Color Filter	Convert color image to color extracted image or binary image.
		Anti Color Shading	To remove the irregular color/pattern by uniformizing max.2 specified colors.
		Stripes Removal Filter Ⅱ	Remove the background pattern of vertical, horizontal and diagonal stripes.
		Polar Transformation	Rectify the image by polar transformation. Useful for OCR or pattern inspection printed on circle.
		Trapezoidal Correction	Rectify the trapezoidal deformed image.
		Machine Simulator	How the alignment marks would move on the image when each stage or robot axis is controlled can be checked.
		Image Subtraction	The registered model image and measurement image are compared and only the different pixels are extracted and converted to an image.
		Advanced filter	Process the images acquired from cameras in order to make them easier to measure. This processing item consolidates existing image conversion filtering into one processing item and adds extra functions.
		Panorama	Combine multiple image to create one big image.
Support measurement		Unit Macro	Advanced arithmetic processing can be easily incorporated into workflow as Unit Macro processing items.
		Unit Calculation Macro	This function is convenient when the user wants to calculate a value using an original calculation formula or change the set value or system data of a processing item.
		Calculation	Used when using the judge results and measured values of ProcItem which are registered in processing units.
		Line Regression	Used for calculating regression line from plural measurement coodinate.
		Circle Regression	Used for calculating regression circle from plural measurement coordinate.
		Precise Calibration	Used for calibration corresponding to trapezoidal distortion and lens distortion.
		User Data	Used for setting of the data that can be used as common constants and variables in scene group data.
		Set Unit Data	Used to change the ProcItem data (setting parameters,etc.) that has been set up in a scene.
		Get Unit Data	Used to get one data (measured results, setting parameters,etc.) of ProcItem that has been set up in a scene.
		Set Unit Figure	Used for re-setting the figure data (model, measurement area) registered in an unit.
		Get Unit Figure	Used for get the figure data (model, measurement area) registered in an unit.
		Trend Monitor	Used for displaying the information about results on the monitor, facilitating to avoid NG and analyze causes.
		Image Logging	Used for saving the measurement images to the memory and USB memory.
		Image Conversion Logging	Used for saving the measurement images in JPEG and BMP format.
		Data Logging	Used for saving the measurement data to the memory and USB memory.
		Elapsed Time	Used for calculating the elapsed time since the measurement trigger input.
		Wait	Processing is stopped only at the set time. The standby time is set by the unit of [ms].

Group	Icon	Processing Item	
Support measurement		Focus	Focus setting is supported.
		Iris	Focus and aperture setting is supported.
		Parallelize*3	A part of the measurement flow is divided into two or more tasks and processed in parallel to shorten the measurement time. This processing item is placed at the top of processing to be performed in parallel.
		Parallelize Task*3	A part of the measurement flow is divided into two or more tasks and processed in parallel to shorten the measurement time. This processing item is placed immediately before processing to be performed in parallel between Parallelize and Parallelize End.
		Statistics	Used when you need to calculate an average of multiple measurement results.
		Referrence Calib Data	Calibration data and distortion compensation data held under other processing items can be referenced.
		Position Data Calculation	The specified position angle is calculated from the measured positions.
		Stage Data	Sets and stores data related to stages.
		Robot Data	Sets and stores data related to robots.
		Vision Master Calibration	This processing item automatically calculates the entire axis movement amount of the control equipment necessary for calibration.
		PLC Mastoer Calibration	Calibration data is created using a communication command from PLC.
		Convert Position Data	The position angle after the specified axis movement is calculated.
		Movement Single Position	The axis movement that is required to match the measured position angle to the reference position angle is calculated.
		Movement Multi Points	The axis movements that are required to match the measured position angles to the corresponding reference position angles are calculated.
		Detection Point	Obtains position/angle information by r eferring to the coordinate values measured with the Measurement Processing Unit.
		Camera Calibration	By setting the camera calibration, the measurement result can be converted and output as actual dimensions.
		Data Save	The set data can be saved in the controller main unit or as scene data. The data is held even after the FH/FZ power is turned off.

Group	Icon	Processing Item	
Branch		Conditional Branch	Used where more than two kinds of products on the production line need to detected separately.
		End	This ProcItem must be set up as the last processing unit of a branch.
		DI Branch	Same as ProcItem "Branch". But you can change the targets of conditional branching via external inputs.
		Control Flow Normal	Set the measurement flow processing into the wait state in which the specific no-protocol command can be executed.
		Control Flow PLC Link	Set the measurement flow processing into the wait state in which the specific PLC Link command can be executed.
		Control Flow Parallel	Set the measurement flow processing into the wait state in which the specific parallel command can be executed.
		Control Flow Fieldbus	Set the measurement flow processing into the wait state in which the specific Fieldbus command can be executed.
		Selective Branch	Easily branch to multiple destinations.
Output result		Data Output	Used when you need to output data to the external devices such as PLC or PC via serial ports.
		Parallel Data Output	Used when you need to output data to the external devices such as PLC or PC via parallel ports.
		Parallel Judgement Output	Used when you need to output judgement results to the external devices such as PLC or PC via parallel ports.
		Fieldbus Data Output	Outputs data to an external device, such as a Programmable Controller, through a fieldbus interface.
Display result		Result Display	Used for displaying the texts or the figures in the camera image.
		Display Image File	Display selected image file.
		Display Last NG Image	Display the last NG images.

*1 Bar Codes that can be read : JAN/EAN/UPC (including add-on codes), Code 39, Codabar (NW-7), ITF (Interleaved 2 of 5), Code 93, Code 128, GS1-128, GS1 DataBar (RSS-14 / RSS Limited / RSS Expanded), Pharmacode
*2 2D Codes that can be read : Data Matrix (ECC200), QR Code
*3 FZ5-L3□□/-6□□ controllers do not support.

Dimensions

(Unit: mm)

Sensor Controllers

FZ5-series LCD-integrated type
FZ5-1200/-1205/-1200-10/-1205-10
FZ5-1100/-1105/-1100-10/-1105-10
FZ5-800/-805/-800-10/-805-10
FZ5-600/-605/-600-10/-605-10

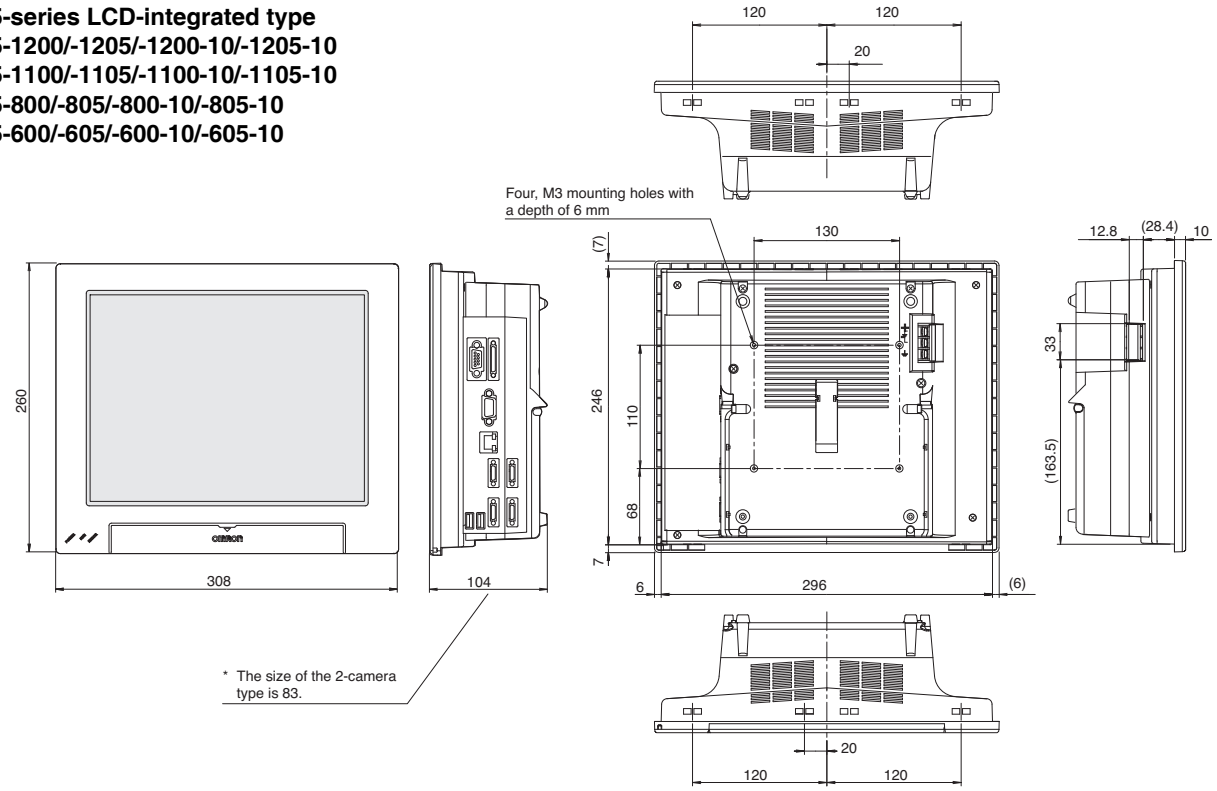

FZ5-series Lite Box-type
FZ5-L350/-L355/-L350-10/-L355-10

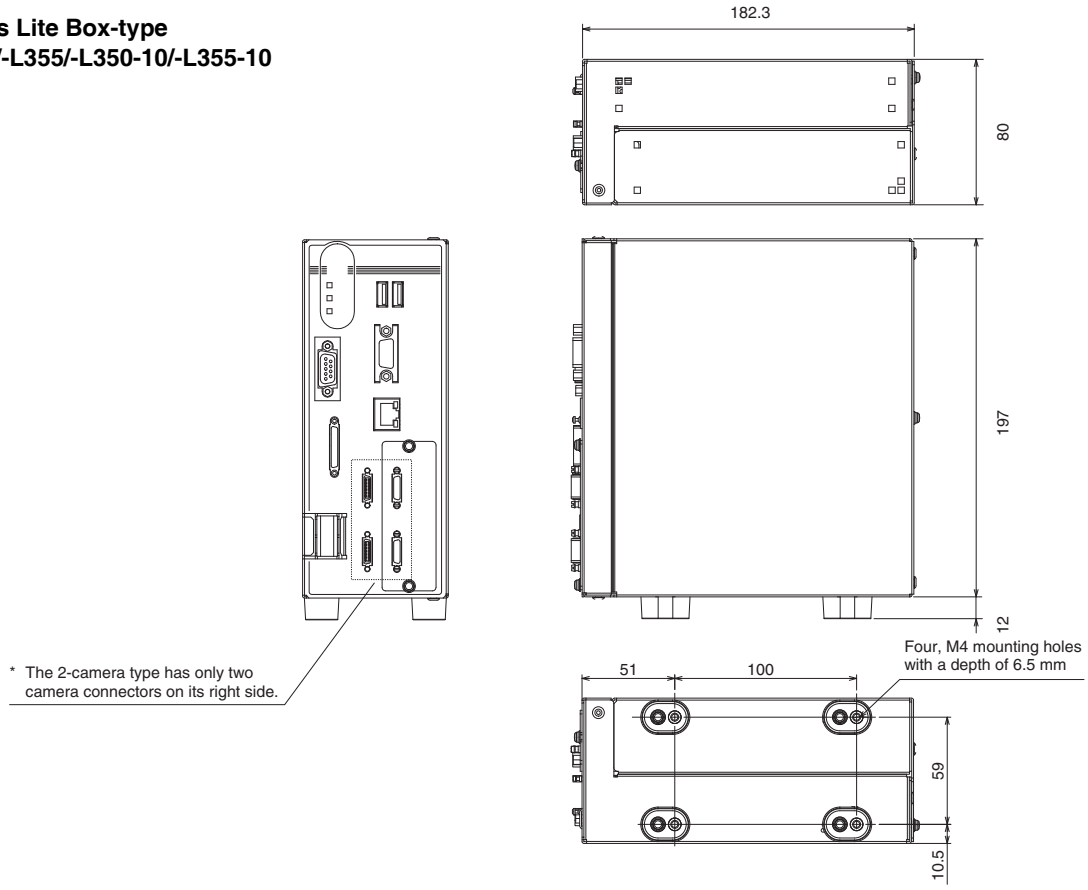

Cameras

Digital CCD/CMOS Cameras

300,000-pixel camera
FZ-S
FZ-SC

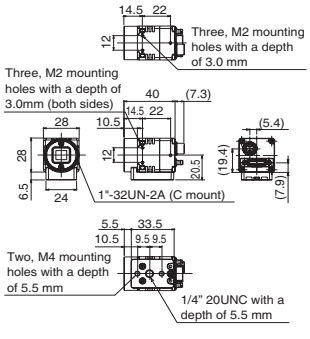

2 million-pixel camera
FZ-S2M
FZ-SC2M

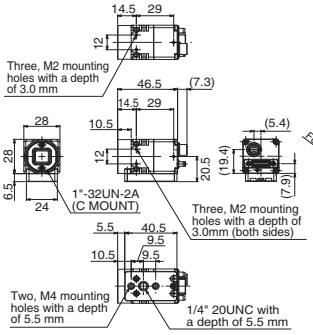

5 million-pixel camera
FZ-S5M3
FZ-SC5M3

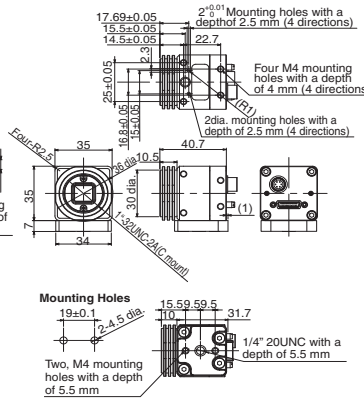

High-speed CCD Camera

FZ-SH
FZ-SHC

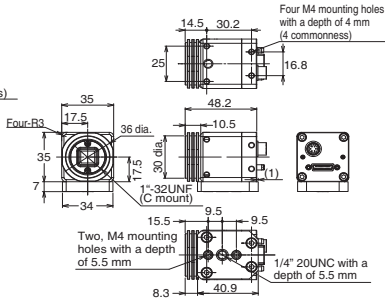

Small digital CCD cameras

Camera head

Flat camera
FZ-SF
FZ-SFC

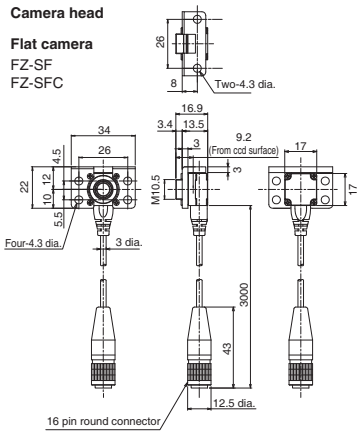

Pen-shaped camera
FZ-SP
FZ-SPC

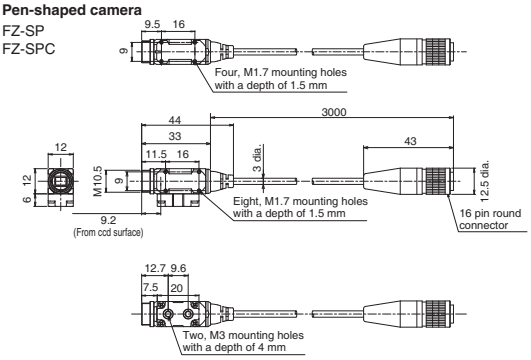

Camera amplifier

Can be used for both flat cameras and pen-shaped cameras

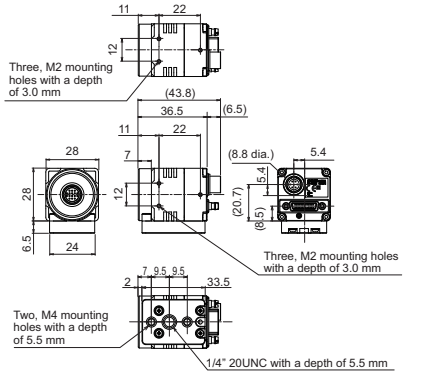

Intelligent Compact CMOS Cameras

Narrow view / Standard

FZ-SQ010F
FZ-SQ050F

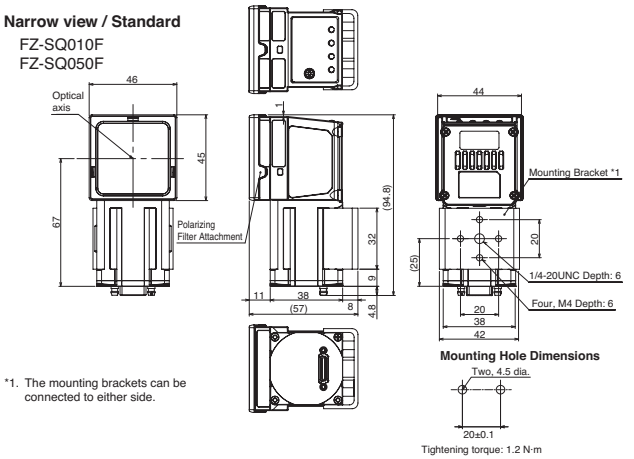

*1. The mounting brackets can be connected to either side.

Wide View

FZ-SQ100F (long-distance)
FZ-SQ100N (short-distance)

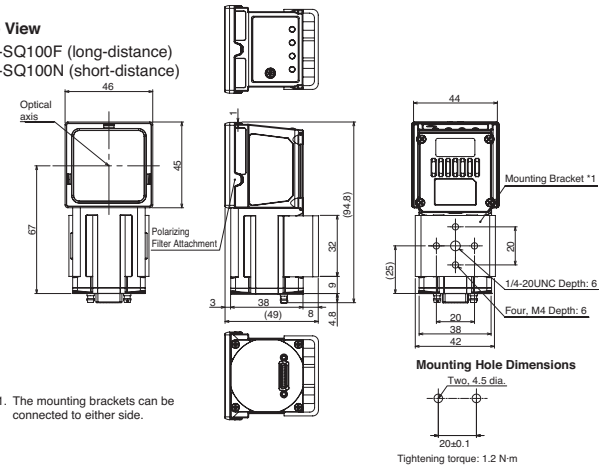

*1. The mounting brackets can be connected to either side.

Cables

Camera Cable

Camera Cable

FZ-VS3

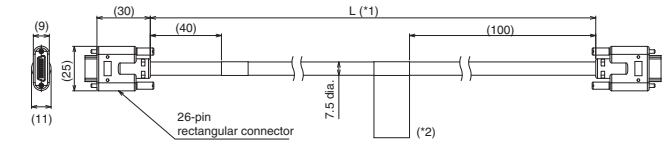

Bend resistant Camera Cable

FZ-VSB3

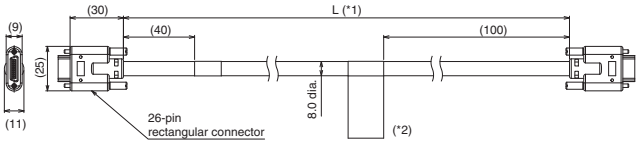

Right-angle Camera Cable

FZ-VSL3

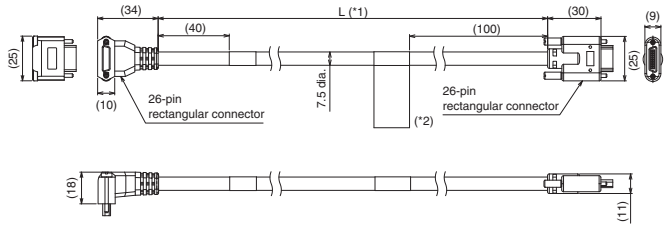

Bend resistant Right-angle Camera Cable

FZ-VSLB3

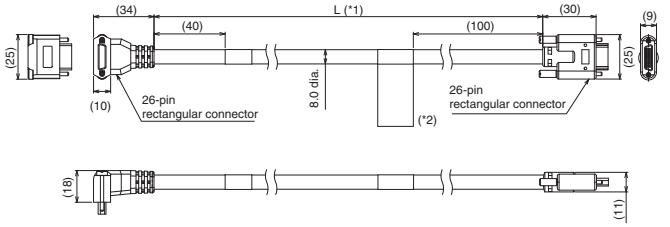

Long-distance Camera Cable

FZ-VS4

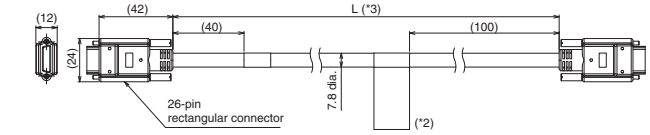

Long-distance Right-angle Camera Cable

FZ-VSL4

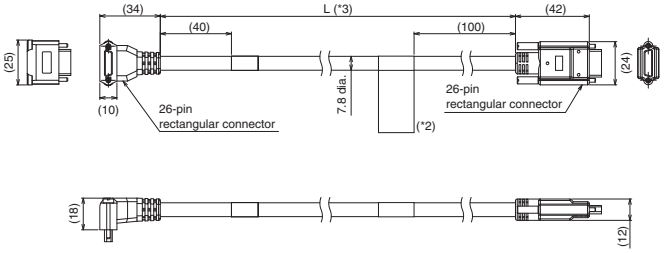

*1. Cable is available in 2m/3m/5m/10m.
*2. Each camera cables has polarity.
Please ensure that the name plate side of the cable is connected to the controller.
*3. Cable is available in 15m.

Parallel Cable

FZ-VP

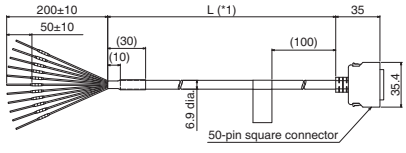

*1. cable is available in 2m/5m.

FZ-VPX

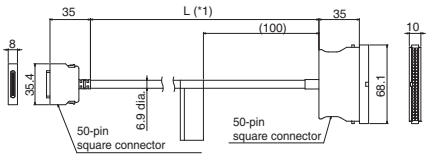

*1. cable is available in 2m/5m.

LED Monitor Cable

FZ-VM

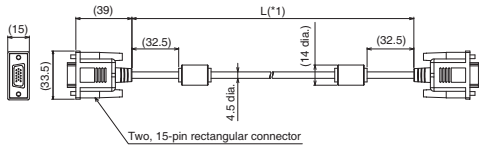

*1. cable is available in 2m/5m.

LCD Monitor

FZ-M08

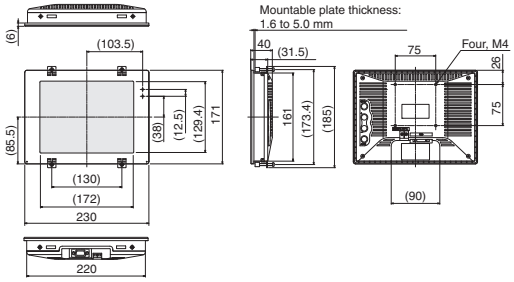

Camera Cable Extension Unit

FZ-VSJ

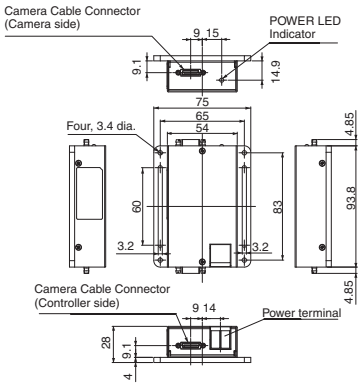

Extension Tubes for Small Camera

FZ-LESR

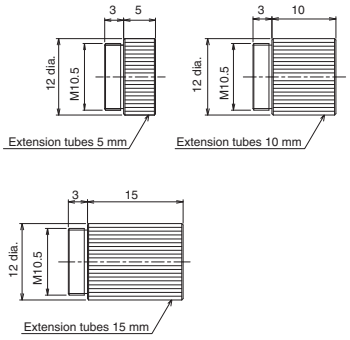

Lens for Small Camera

FZ-LES Series

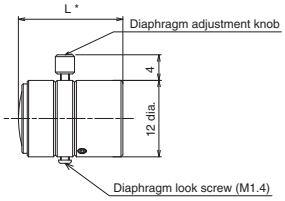

* Overall length is available in 16.4mm/19.7mm/23.1mm/25.5mm.

Optical Chart

Meaning of Optical Chart

The X axis of the optical chart shows the field of vision (mm) (*1), and the Y axis of the optical chart shows the camera installation distance (mm) (*2).

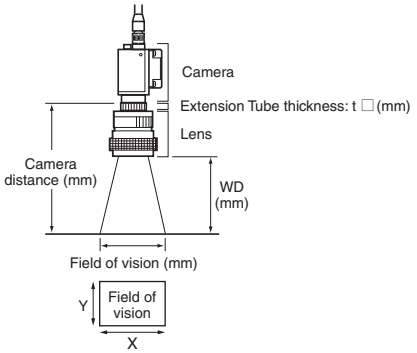

*1. The lengths of the fields of vision given in the optical charts are the lengths of the Y axis.
*2. The vertical axis represents WD for small cameras.

Digital CCD/CMOS Camera FZ-S□5M3, 5 million-pixel

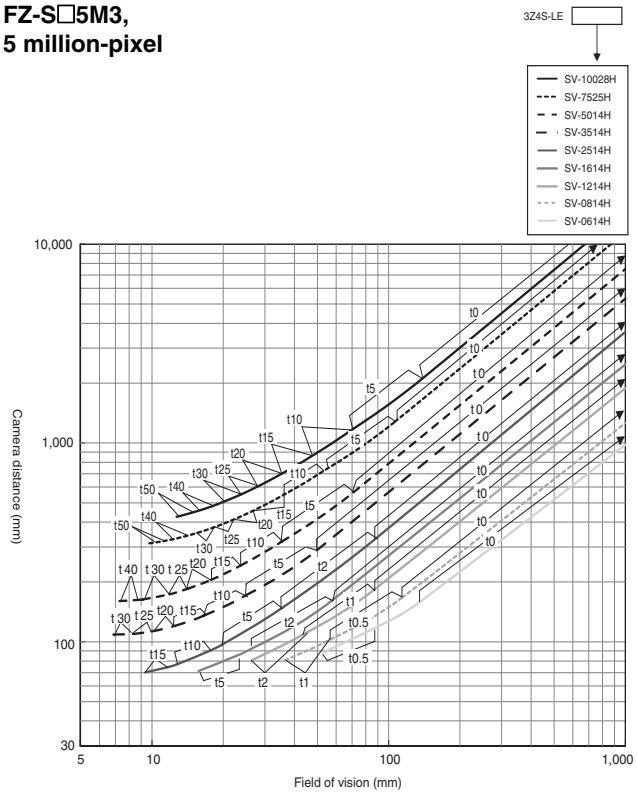

Digital CCD Camera
FZ-S□2M,
2 million-pixel

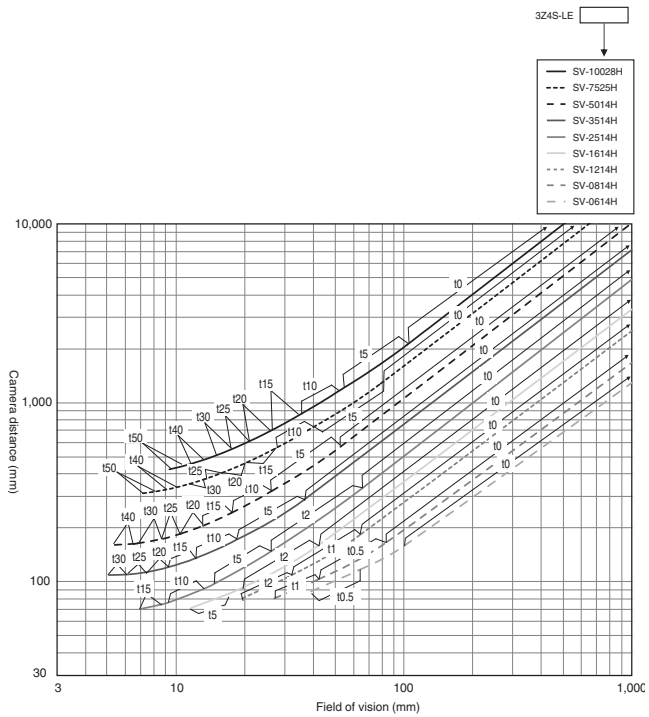

High-speed CCD Camera
FZ-SH□,
Digital CCD Camera
FZ-S□,
300,000-pixel

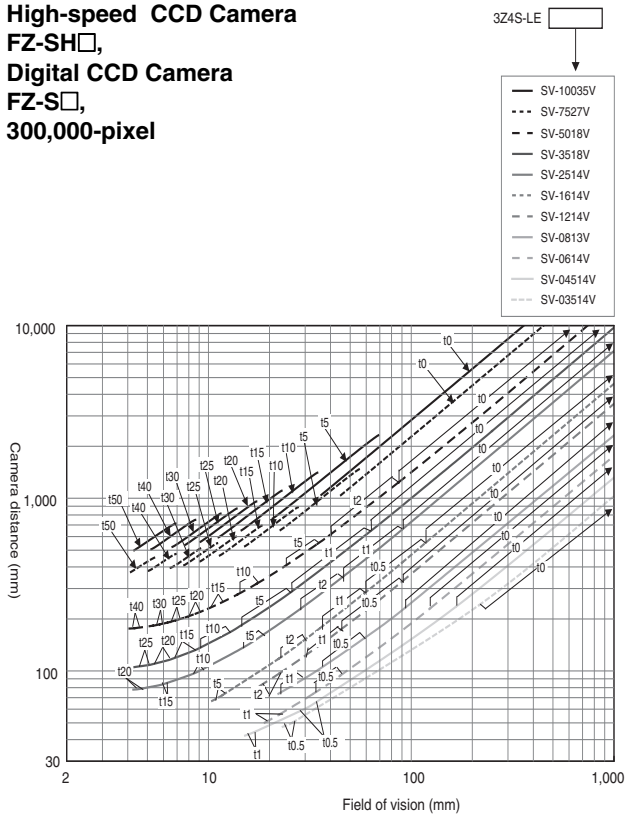

Small Digital CCD Cameras
FZ-SF□,
FZ-SP□,
300,000-pixel

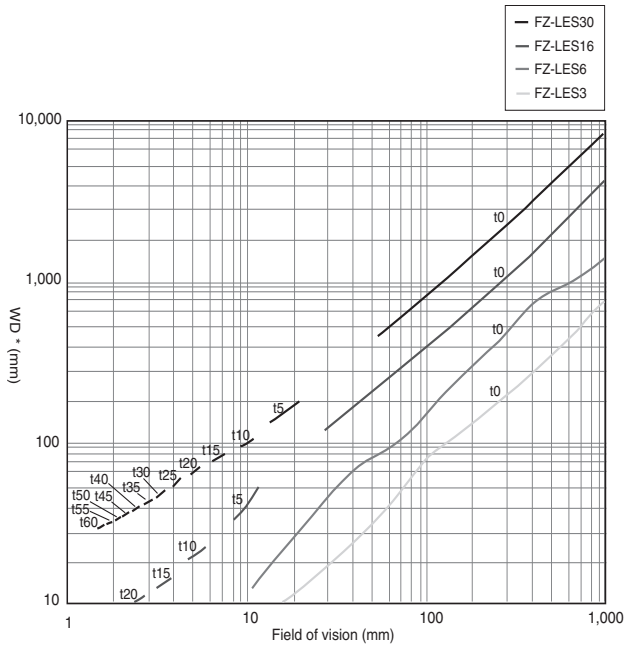

* The vertical axis represents WD, not installation distance.

Digital CCD/CMOS Camera
FZ-S□5M3,
5 million-pixel
(Vibrations and shocks resistant)

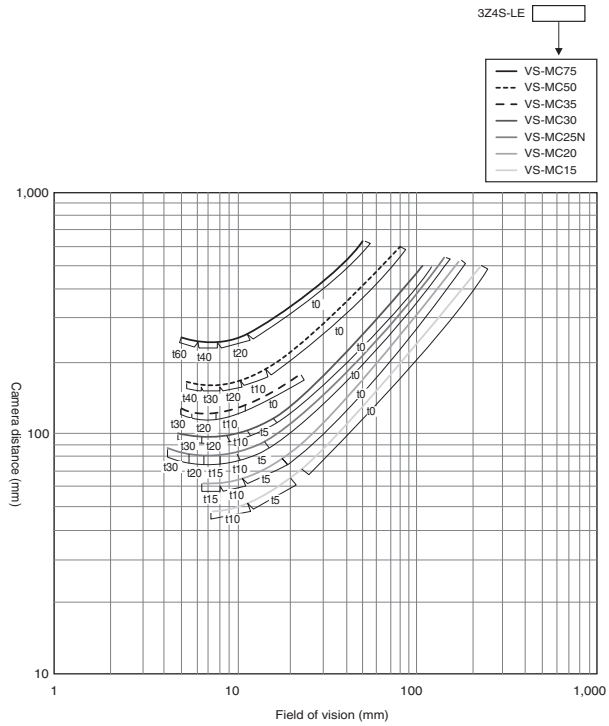

Digital CCD Camera
FZ-S□2M,
2 million-pixel
(Vibrations and shocks resistant)

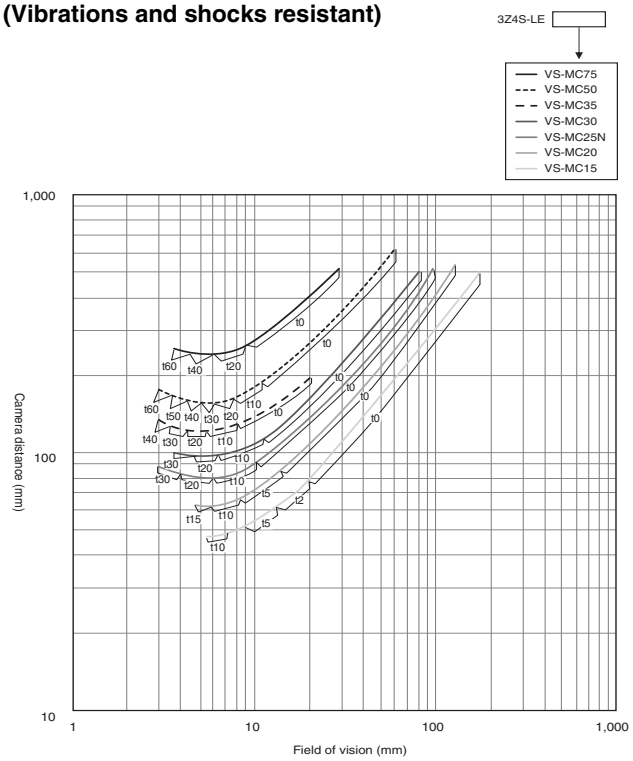

High-speed CCD Camera
FZ-SH□,
Digital CCD Camera
FZ-S□,
300,000-pixel
(Vibrations and shocks resistant)

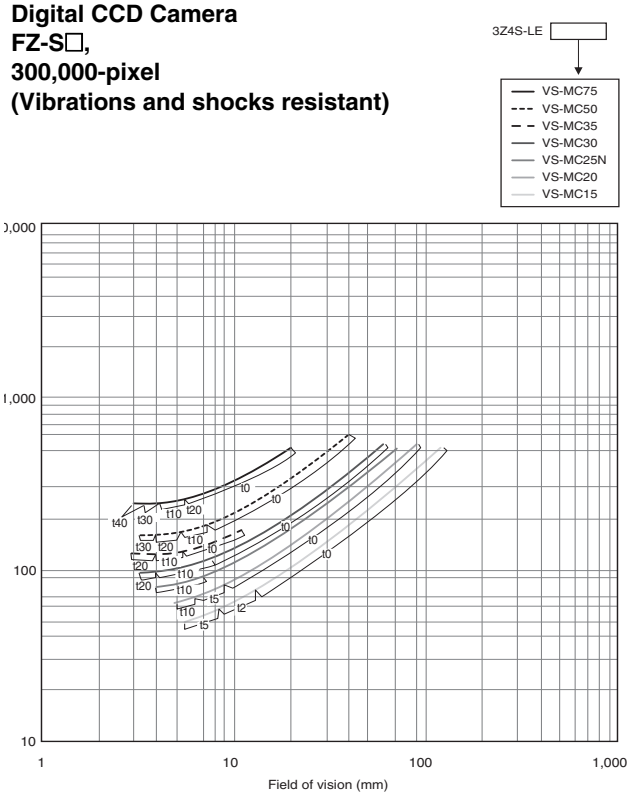

Related Manuals

Man.No.	Model number	Manual
Z365	FH/FZ5	Vision System FH/FZ5 Series User's Manual
Z341	FH/FZ5	Vision System FH/FZ5 Series Processinng Item Function Reference Manual
Z342	FH/FZ5	Vision System FH/FZ5 Series User's Manual for Communications Settings
Z366	FH/FZ5	Vision System FH/FZ5 series Hardware Setup Manual
Z367	FH/FZ5	Vision System FH/FZ5 series Macro Customize Functions Programming Manual

Terms and Conditions Agreement

Read and understand this catalog.

Please read and understand this catalog before purchasing the products. Please consult your OMRON representative if you have any questions or comments.

Warranties.

(a) Exclusive Warranty. Omron's exclusive warranty is that the Products will be free from defects in materials and workmanship for a period of twelve months from the date of sale by Omron (or such other period expressed in writing by Omron). Omron disclaims all other warranties, express or implied.

(b) Limitations. OMRON MAKES NO WARRANTY OR REPRESENTATION, EXPRESS OR IMPLIED, ABOUT NON-INFRINGEMENT, MERCHANTABILITY OR FITNESS FOR A PARTICULAR PURPOSE OF THE PRODUCTS. BUYER ACKNOWLEDGES THAT IT ALONE HAS DETERMINED THAT THE PRODUCTS WILL SUITABLY MEET THE REQUIREMENTS OF THEIR INTENDED USE.

Omron further disclaims all warranties and responsibility of any type for claims or expenses based on infringement by the Products or otherwise of any intellectual property right. (c) Buyer Remedy. Omron's sole obligation hereunder shall be, at Omron's election, to (i) replace (in the form originally shipped with Buyer responsible for labor charges for removal or replacement thereof) the non-complying Product, (ii) repair the non-complying Product, or (iii) repay or credit Buyer an amount equal to the purchase price of the non-complying Product; provided that in no event shall Omron be responsible for warranty, repair, indemnity or any other claims or expenses regarding the Products unless Omron's analysis confirms that the Products were properly handled, stored, installed and maintained and not subject to contamination, abuse, misuse or inappropriate modification. Return of any Products by Buyer must be approved in writing by Omron before shipment. Omron Companies shall not be liable for the suitability or unsuitability or the results from the use of Products in combination with any electrical or electronic components, circuits, system assemblies or any other materials or substances or environments. Any advice, recommendations or information given orally or in writing, are not to be construed as an amendment or addition to the above warranty.

See http://www.omron.com/global/ or contact your Omron representative for published information.

Limitation on Liability; Etc.

OMRON COMPANIES SHALL NOT BE LIABLE FOR SPECIAL, INDIRECT, INCIDENTAL, OR CONSEQUENTIAL DAMAGES, LOSS OF PROFITS OR PRODUCTION OR COMMERCIAL LOSS IN ANY WAY CONNECTED WITH THE PRODUCTS, WHETHER SUCH CLAIM IS BASED IN CONTRACT, WARRANTY, NEGLIGENCE OR STRICT LIABILITY.

Further, in no event shall liability of Omron Companies exceed the individual price of the Product on which liability is asserted.

Suitability of Use.

Omron Companies shall not be responsible for conformity with any standards, codes or regulations which apply to the combination of the Product in the Buyer's application or use of the Product. At Buyer's request, Omron will provide applicable third party certification documents identifying ratings and limitations of use which apply to the Product. This information by itself is not sufficient for a complete determination of the suitability of the Product in combination with the end product, machine, system, or other application or use. Buyer shall be solely responsible for determining appropriateness of the particular Product with respect to Buyer's application, product or system. Buyer shall take application responsibility in all cases.

NEVER USE THE PRODUCT FOR AN APPLICATION INVOLVING SERIOUS RISK TO LIFE OR PROPERTY OR IN LARGE QUANTITIES WITHOUT ENSURING THAT THE SYSTEM AS A WHOLE HAS BEEN DESIGNED TO ADDRESS THE RISKS, AND THAT THE OMRON PRODUCT(S) IS PROPERLY RATED AND INSTALLED FOR THE INTENDED USE WITHIN THE OVERALL EQUIPMENT OR SYSTEM.

Programmable Products.

Omron Companies shall not be responsible for the user's programming of a programmable Product, or any consequence thereof.

Performance Data.

Data presented in Omron Company websites, catalogs and other materials is provided as a guide for the user in determining suitability and does not constitute a warranty. It may represent the result of Omron's test conditions, and the user must correlate it to actual application requirements. Actual performance is subject to the Omron's Warranty and Limitations of Liability.

Change in Specifications.

Product specifications and accessories may be changed at any time based on improvements and other reasons. It is our practice to change part numbers when published ratings or features are changed, or when significant construction changes are made. However, some specifications of the Product may be changed without any notice. When in doubt, special part numbers may be assigned to fix or establish key specifications for your application. Please consult with your Omron's representative at any time to confirm actual specifications of purchased Product.

Errors and Omissions.

Information presented by Omron Companies has been checked and is believed to be accurate; however, no responsibility is assumed for clerical, typographical or proofreading errors or omissions.

Note: Do not use this document to operate the Unit.

OMRON Corporation **Industrial Automation Company**
Tokyo, JAPAN

Contact: www.ia.omron.com

Regional Headquarters

OMRON EUROPE B.V.
Sensor Business Unit
Carl-Benz-Str. 4, D-71154 Nufringen, Germany
Tel: (49) 7032-811-0/Fax: (49) 7032-811-199

OMRON ELECTRONICS LLC
2895 Greenspoint Parkway, Suite 200
Hoffman Estates, IL 60169 U.S.A
Tel: (1) 847-843-7900/Fax: (1) 847-843-7787

OMRON ASIA PACIFIC PTE. LTD.
No. 438A Alexandra Road # 05-05/08 (Lobby 2),
Alexandra Technopark,
Singapore 119967
Tel: (65) 6835-3011/Fax: (65) 6835-2711

OMRON (CHINA) CO., LTD.
Room 2211, Bank of China Tower,
200 Yin Cheng Zhong Road,
PuDong New Area, Shanghai, 200120, China
Tel: (86) 21-5037-2222/Fax: (86) 21-5037-2200

Authorized Distributor:

CSM_7_1_0617
Cat. No. Q203-E1-02 0517(0115)